KARE DESIGN

81075; 81076

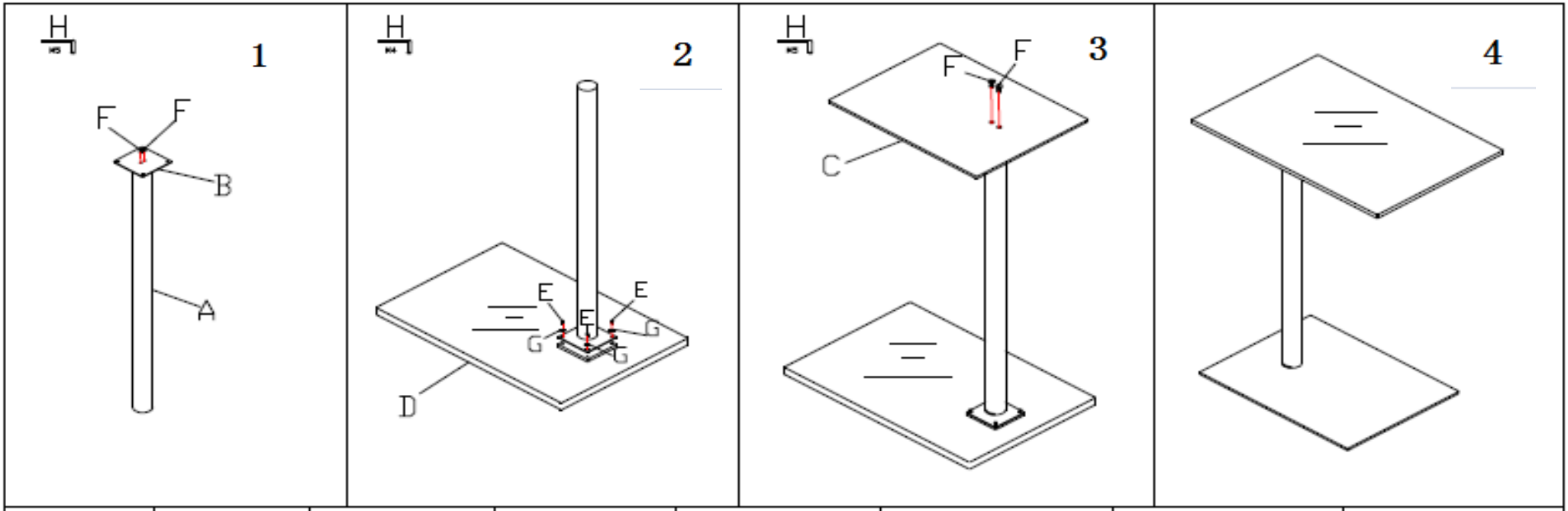

A	B	C	D	E	F	G	H
ø38*660	60*60*3,0	300*400*5,0	340*500*8	1/4*12mm	M8*20mm		M5 M4
1pcs	1pcs	1pcs	1pcs	4pcs	4pcs	4pcs	1pcs

Remark:Do not tighten any screws until item is fully assembled!